1173182 Tiger VX 1600W 48V13Ah Lithium 12"12"

ERSATZTEILLISTE | SPARE PARTS LIST

VERS. 1.0 | 08.08.2025

Tiger VX （A车架）FRAME ASSY.

A

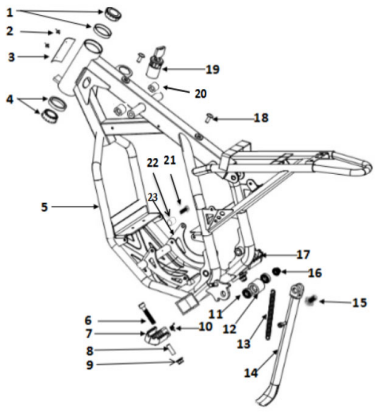

序号	零部件编号 SKU	Menila ET Art	EAN Code	英文名称 Spare part name in English	中文名称	规格Specification	order	Note
A-1	304290016	9075150	4251814691519	Tapered Bearing Kit Upper	上部锥度轴承	91683/22.5(含钢碗）		With steel bowl
A-4	304290017	9075151	4251814691526	Tapered Bearing Kit Lower	下部锥度轴承	91683/24		
A-5	302030377	90799150101	4255816883408	Frame, black	VX车架（喷塑）	哑光黑色		
A-7	302430009	90760020101	4251814682210	Footrest, L	左脚踏	长脚踏		
A-8	308090043	9076026	4251814691564	Footrest inner spacer	小越野脚踏隔套	ϕ8*0.8*24mm		
A-10	305190001	9076027	4251814691571	Left Footrest Spring	小越野脚踏扭簧 左	ϕ2*ϕ14.5*12mm左新款		
	305180001	9076028	4251814691588	Right Footrest Spring	小越野脚踏扭簧 右	ϕ2*ϕ14.5*12mm右		
A-11	304290014	9076032	4251814691649	Chain Tensioner Bearing #698Z	轴承	698Z		
A-12	303130003	9076033	4251814691656	Chain Tensioner	涨紧轮	ϕ19*ϕ28*24mm，小越野款		
A-13	305170002	9076029	4251814691595	Side Stand Spring	脚撑拉簧	ϕ15*ϕ2.5*100mm		
A-14	302190010	90745900101	4255816883460	Side Stand for 12/12 wheels	长脚撑（喷塑）	L=260mm，借用大轮脚撑		
A-14	302190005	90745910101	4255816883477	Side Stand for 14/12 wheels	长脚撑（喷塑）	L=335mm		
A-17	302430006	90760030101	4251814682227	Footrest,R	右脚踏	长脚踏		
A-19	306230008	9074585	4255816883415	Key ignition	防水电门锁	缙云三鼎，二档四线 防水钥匙		
A-20	308100004	9074586	4255816883422	Rubber Plug	油壶软胶套	Ø28*Ø18*30mm		
A-22	308090015	9075393	4251814669044	Motor Spacer （ for 60V2000W MOTOR only)	ZR50电机隔套	ϕ14*ϕ8*21.5mm		48V/36V Motor dont need this part
A-23	302390005	9074587	4255816883439	Motor Holder	电机固定片（喷塑）			
A-2	308150001	9075226	4251814660003	Rivet	铆钉	ϕ3.2*9		
A-6	308190012	9075227	4251814660010	Hex Socket Cap Bolt	内六角螺丝	M6*40		
A-9	308050005	9075228	4251814660027	Lock Nut	防松螺母	M6		
A-15	308330001	9074588	4255816883446	Hex Socket Cap Bolt	外六角台阶螺丝	M10*25*1.25		
A-16	308050005	9075228	4251814660027	Lock Nut	防松螺母	M6		
A-18	308170003	9075249	4251814660232	Hex Socket Cap Bollt,Flat Head	内六角大扁头螺丝	M6*16		
A-21	308020030	9075320	4251814664452	Flange Bolt	法兰螺丝	M6*30		
	308020059	9074589	4255816883453	Flange Bolt	法兰螺丝（螺丝加耐高温厌氧胶）	M6*12		

Tiger VX（B后叉）REAR SUSPENSION ASSY.

B

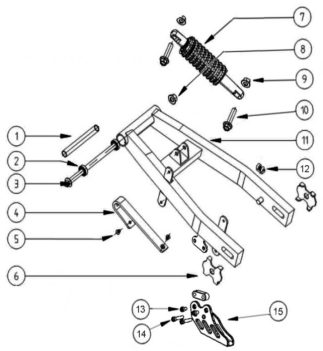

序号	零部件编号 SKU	Menila ET Art	EAN Code	英文名称 Spare part name in English	中文名称	规格Specification	order	Note
B-1	308090002	9074592	4255816883484	Rear Swing Arm spacer	后叉隔套	ϕ14*1.5*114mm		
B-2	304290011	9076122	4255675456973	Rear Swing Arm bearing #63900Z	轴承	63900Z		
B-3	308020005	9074593	4255816883491	Rear Swing Arm Axle M10*175*1.25	法兰螺丝	M10*175*1.25		
B-4	303050002	9078506	4251814656983	Swing Arm Protection Rubber	后叉防擦片	短款		
B-6	302490001	9074594	4255816883507	Wheel Axle Holder	后叉轴防滑片			
B-7	304020033	90770950808	4255816883583	Rear Shock white	后减震	ϕ9-250mm油压，白色弹簧，黑色铝头		
B-10	308020011	9075232	4251814660065	Flange Bolt	法兰螺丝	M10*40*1.25		
B-11	302330040	90765070101	4255816883569	Rear Swing Arm,Black	后叉（喷塑）	前14/12通用）加长款，哑光黑色		
		90765080101	4255816883576	Rear Swing Arm,Black	后叉（喷塑）	前12/12通用　加长款，哑光黑色		
B-12	307210001	9074595	4255816883514	Rear Brake Cable Clip	后刹车线线扣	使用，塑料新款		
B-14	308190010	9075296	4251814663820	Hex Socket Cap Bolt	内六角螺丝	M6*30		Assembled
B-15	303060002	9074596	4255816883521	Chain Guider	链托总成	链拖		
B-8	308350001	9075198	4251814656952	Self Lock Nut	自锁螺母	M10*1.25		
B-9	308350001	9075198	4251814656952	Self Lock Nut	自锁螺母	M10*1.25		
B-5	308280004	9075298	4251814663844	ANSI cross slotted head screw	十字沉头螺丝	M6*12		
B-13	308190006	9075285	4251814663677	Hex Socket Cap Bolt	内六角螺丝	M6*12		

Tiger VX（C手把部分）HANDLEBAR ASSY.

C

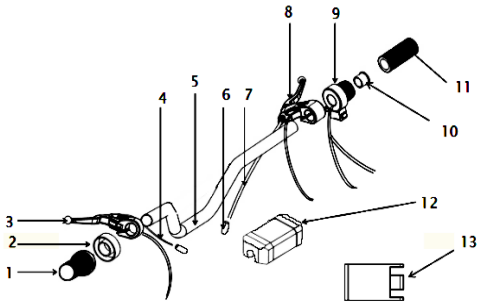

序号	零部件编号 SKU	Menila ET Art	EAN Code	英文名称 Spare part name in English	中文名称	规格Specification	order	Note
C-1	305010007	9075152	4251814691694	Left Rubber Grip	左把套	左，T247		
C-2	305020001	9075153	4251814691700	Left Rubber Grip Holder	电动小越野把套 对称环			
C-3	305340007	9071217	4255816884047	Rear Brake Lever, Mechanical brake	左刹把	三指握距全铝刹把，黑色手柄，带断电(防水连接器）		
C-3	305120020	9071218	4255816884054	Rear Hydraulic Brake Assy.(complete with lever, cable and pump), waterproof cable connector,suitable for standard handlebar, L=**1200mm**	Tiger VX后油刹	L=**1200mm**，下泵反2 黑色，带断电（防水连接器），凯洛斯		OPTION
C-4	305230010	9077300	4255816883613	Rear Brake Cable, Mechanical brake	刹车线	1200*1350mm		changed after rear brake line adjustme
C-5	302290004	90751540101	4251814691724	Handlebar, standard	手把管	L=600±5mm，MD07款，亚光黑色		standard
C-6	305240001	9075155	4251814691731	Brake Cable End Cap	刹车线线帽	Brake Cable End Cap		
C-7	305230009	9071007	4251814682326	Front Brake Cable, Mechanical brake	刹车线	900*1050mm		
C-8	305330005	9071214	4255816883590	Rear Brake lever, mechanical	右刹把	三指握距全铝刹把，黑色手柄，带断电(防水连接器）		
C-8	305220008	9071215	4255816883606	Front Hydraulic Brake Assy.(complete with lever, cable and pump), waterproof cable connector,suitable for standard handlebar, L=850mm	前油刹	油管长度L=850mm，下泵正2，带断电（防水连接器），下泵黑色,凯洛斯		OPTION
C-9	306500036	9074597	4255816883538	Throttle Assy With Electric Volume Meter **60V** Lithium, waterproof cable connector	转把(总成）	半截式，60V锂电电量表，熄火开关(防水连接器）		
C-9	306500041	9074598	4255816883545	Throttle Assy With Electric Volume Meter **48V** Lithium, waterproof cable connector	转把（总成）	半截式，48V锂电电量表，熄火开关，（含：左把套T247，右把套T246，活动节，对称环）（防水连接器）		
C-9	306500051	9074599	4255816883552	Throttle Assy With Electric Volume Meter **36V** Lithium, waterproof cable connector	转把（总成）	半截式，36V锂电电量表，熄火开关，（含：左把套T247，右把套T246，活动节，对称环）（防水连接器）		
C-10	306510001	9075236	4251814660102	Throttle Inner Spacer	转把中间活动节	电动小越野		
C-11	305010005	9075156	4251814691755	Throttle Grip # T246	右把套	右，半截式，T246		

C-12	307270001	9075157	4251814691762	Handlebar Square Sponge, for standard handlebar	护胸棉			
C-13	307160001	90751580101	4255675432502	Handlebar Square Sponge Cover black for standard handlebar bl	横布条黑色			
C-14	305390029	9071135	4255675410371	Brake Lever, Hydraulic brake	油刹刹把（左右通用）	黑色（只要刹把），凯洛斯		

Tiger VX（D前叉）FRONT SUSPENSION ASSY.

D

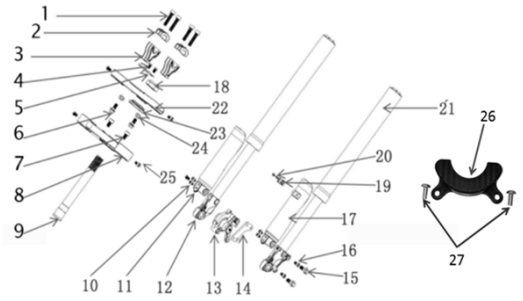

序号	零部件编号 SKU	Menila ET Art	EAN Code	英文名称 Spare part name in English	中文名称	规格Specification	order	Note
D-1	308190016	9076037	4251814691786	Hex Socket Cap Bolt	内六角螺丝	M8*20		
D-2	305260002	9073024	4251814691793	Casted Alu. Clamp of Handlebar	上锁扣，压铸	E-MD07款，压铸款，银色		
D-3	305280002	9073025	4251814691809	Casted Alu. Holder of Handlebar	下锁扣，压铸	E-MD07款，压铸款，银色		
D-22	305250002	9075160	4251814694046	Casted Upper Splintage	上联板	E-MD07款，压铸铝连板，银色		
D-8	305270002	9075161	4251814694053	Casted Alu. Lower Splintage	下联板	E-MD07款，压铸铝连板，银色		
D-9	302470001	9075162	4251814694060	Steering Rod fixed into Casted Alu. Lower Splintage	方向柱，压铸联板	L=195mm		
D-2	305260001	9073103	4251814637678	Forged Alu. Clamp of Handlebar	上锁扣，锻打	锻打款，银色		OPTION
D-3	305280001	9073104	4251814637685	Forged Alu. Holder of Handlebar	下锁扣，锻打	锻打款，银色		OPTION
D-22	305250001	9073105	4251814637746	Forged Alu. Upper Splintage	上联板	锻打铝连板，银色		OPTION
D-8	305270001	9073106	4251814637753	Forged Alu. Lower Splintage	下联板	锻打铝连板，银色		OPTION
D-9	302470007	9073106	4251814637753	Steering Rod fixed into Forged Alu. Lower Splintage	方向柱，锻打联板	L=198mm		OPTION
D-5	302480001	9075159	4251814694039	Number Plate Bracket	号码牌固定片	自产，镀锌		
D-17	307500007	90770130101	4251814694084	Fork Foot Cover L, Black	前叉护板,左	黑色		
D-11	307500001	90770120101	4251814694077	Fork Foot Cover R, Black	前叉护板右	黑色		
D-19	307210004	9075165	4251814694138	Front Brake Cable Clip	前刹车线线扣	款前叉护板配套		
D-12	304160024	90770960101	4255816884061	Fork-RIGHT， black color, L:615mm	前减震右	液压倒置，ϕ39*ϕ42*615mm，小头，黑色（易想）		
D-12	304160027	90770961212	4255816884078	Fork-RIGHT，gold color, L:615mm	前减震右	液压倒置，ϕ39*ϕ42*615mm，小头，钛金色（易想）		OPTION
D-21	304170024	90770970101	4255816884085	Fork-LEFT， black color, L:615mm	前减震左	液压倒置，ϕ39*ϕ42*615mm，大头，黑色（易想）		
D-21	304170027	90770971212	4255816884092	Fork-LEFT，gold color, L:615mm	前减震左	液压倒置，ϕ39*ϕ42*615mm，大头，钛金色（易想）		OPTION
D-13	305390041	9077303	4255816883644	Front Brake Caliper,Hydraulic，black	前液压碟刹下泵（卡钳）	下泵正2，黑色, 凯洛斯		
D-14	302250001	9075163	4251814694114	Front Brake Caliper Holder	前碟刹器固定片			
D-18	308060001	9075164	4251814694121	Nut Cap	盖形螺母	M22*1.0mm		
D-23	308070001	9075166	4251814694145	Lock Nut	盖形锁紧螺母	M22		
D-26	307730001	9077301	4255816883620	Steering stop plate cover	转向护罩	E-MD07款联板用		NEW part since 2023
D-4	308160001	9075218	4251814657836	Hex Socket Cap Bollt,Button Head	内六角半圆头螺丝	M6*12		
D-6	308190002	9075237	4251814660119	Hex Socket Cap Bolt	内六角螺丝	M10*25*1.5		
D-7	308190015	9075239	4251814660133	Hex Socket Cap Bolt	内六角螺丝	M8*16		
D-10	308250001	9077302	4255816883637	Philip's Head Screw,button head	十字半圆头螺丝	M6*8		
D-15	308020029	9075240	4251814660140	Flange Bolt	法兰螺丝	M6*25		
D-16	308190006	9075285	4251814663677	Hex Socket Cap Bolt	内六角螺丝	M6*12		
D-20	308270003	9075241	4251814660157	Cross self-tapping screw, Flat Head	十字扁头自攻	M4*12		
D-24	308010001	9075242	4251814660164	Spring Washer	弹垫	ϕ10		
D-25	308190016	9076037	4251814691786	Hex Socket Cap Bolt	内六角螺丝	M8*20		
D-27	308160001	9075218	4251814657836	Hex Socket Cap Bollt,Button Head	内六角半圆头螺丝	M6*12		

Tiger VX（E前轮）FRONT WHEEL&TIRE ASSY.

E

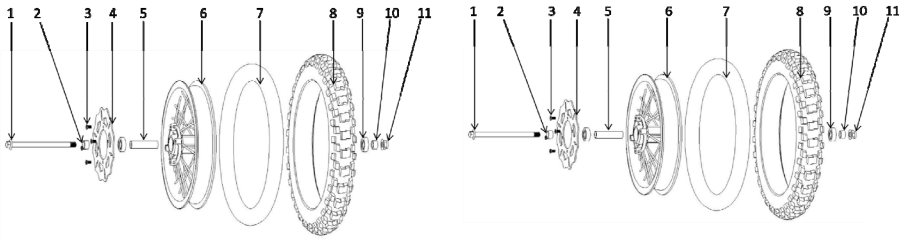

序号	零部件编号 SKU	Menila ET Art	EAN Code	英文名称 Spare part name in English	中文名称	规格Specification	order	Note
E-1	308020022	9076004	4251814682302	Flange Bolt(Front wheel axle)	法兰螺丝	M12*200*1.25		
E-2	308090032	9075167	4251814694152	Front Wheel Spacer, L	前轮左边隔套	ϕ20*ϕ12.5*25mm		
E-3	308160002	9075171	4251814694220	Hex Socket Cap Bolt,Button Head	内六角半圆头螺丝	M6*16		
E-4	305030004	9071005	4251814682180	Front Wheel Brake Disc	碟刹盘	ϕ180*2mm，中心孔：ϕ72mm		
E-5	308090063	9075168	4251814694169	Front Wheel Hub inner spacer	前轮中间隔套	Φ12.5*Φ16*54		

E-6	304080075	9073645	4255816883705	Front Wheel Rim&Hub 1.6-12", STEEL, Black	铁轮毂，前轮	前轮，黑色辐条铁轮毂，1.6-12		1173180+82
E-7		9120348	4255816883729	Inner tube,60/100-12 Junkai	前轮内胎	2.75-12（60/100-12）		1173180+82
E-8		9120349	4255816883736	Outer tire ,60/100-12 Junkai	前轮外胎	2.75-12（60/100-12），深齿花纹		1173180+82
E-6	304080040	9073500	4251814682166	Front Wheel Rim&Hub 1.6-14", STEEL, Black	铁轮毂，前轮	前轮，黑色铁轮毂（辐条）1.4-14		1173183+84+85
E-7	304090006	9120045	4251814680506	Inner tube,60/100-14	前轮内胎	前轮内胎，60/100-14		1173183+84+85
E-8	304100006	9120044	4251814680490	Outer tire ,60/100-14	外胎	前轮外胎，60/100-14，深齿花纹		1173183+84+85
E-9	304290021	9075169	4251814694206	Wheel Bearing # 6301	轴承	6301		
E-10	308090031	9075170	4251814694213	Front Wheel Spacer, R	E-MD07款前轮右边隔套	ϕ20*ϕ12.5*23mm		
E-11	308350002	9075172	4251814694237	Self-lock Nut	自锁螺母	M12*1.25		

Tiger VX（F后轮）REAR WHEEL&TIRE ASSY.

F

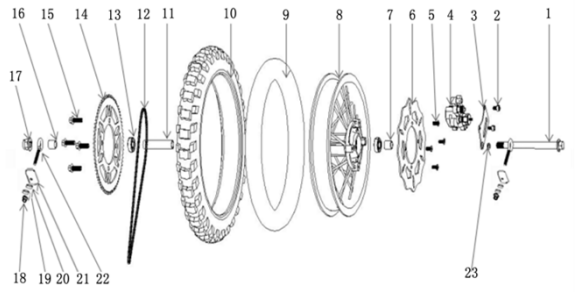

序号	零部件编号 SKU	Menila ET Art	EAN Code	英文名称 Spare part name in English	中文名称	规格Specification	order	Note
F-1	308020023	9077306	4255816883675	Flange Bolt(Rear wheel axle) M12*215*1.25	法兰螺丝	M12*215*1.25		
F-3	302140001	9075174	4251814694251	Rear Brake Caliper Holder	后碟刹器固定片			
F-4	305390042	9071216	4255816883750	Rear Brake Caliper,Hydraulic，black	后液压碟刹下泵(卡钳)	下泵反2，黑色 凯洛斯		
F-5	308160002	9075171	4251814694220	Hex Socket Cap Bollt,Button Head	内六角半圆头螺丝	M6*16		
F-6	305030004	9071005	4251814682180	Brake Disc	碟刹盘	ϕ180*2mm，中心孔：ϕ72mm		
F-7	308090029	9075175	4251814694268	Rear Wheel Spacer,L	后轮左隔套	ϕ20*ϕ12.5*17mm		
F-8	304080077	9073646	4255816883712	Rear Wheel Rim&Hub 1.6-12", STEEL, Black	后轮毂	后轮，黑色辐条铁轮毂，1.6-12		1173180+82
F-9		9120348	4255816883729	Inner tube,60/100-12 Junkai	内胎	2.75-12（60/100-12）		1173180+82
F-10		9120349	4255816883736	Outer tire ,60/100-12 Junkai	外胎	2.75-12（60/100-12），深齿花纹		1173180+82
F-8	304080036	9073501	4251814682173	Rear Wheel Rim&Hub 1.85-12", STEEL, Black	后轮毂	E-MD07后轮，黑色铁轮毂（辐条）1.85-12		1173183+84+85
F-9		9120043	4251814680483	Inner tube,80/100-12 Junkai	内胎	E-MD07后轮内胎，80/100-12		1173183+84+85
F-10		9120042	4251814680476	Outer tire ,80/100-12 Junkai	外胎	E-MD07后轮外胎，80/100-12，深齿花纹		1173183+84+85
F-11	308090064	9075179	4251814694336	Rear Wheel Hub inner spacer	后轮中间隔套	Φ12*Φ16*72		Wheel hub inclsive
F-12	303040033	9072343	4255816883743	Chain T8F-154 Links	链条	加长后叉通用，T8F-154节，		适用于加长款后叉
F-13	304290021	9075169	4251814694206	Wheel Bearing # 6301	轴承	6301		Wheel hub inclsive
F-14	303020015	9072039	4255816883767	Driven Sprocket T8F-68T	链轮	T8F-68齿，内孔ϕ76mm，电泳黑		
F-15	308020037	9075243	4251814660171	Flange Bolt	法兰螺丝	M8*16		
F-16	308090034	9075177	4251814694312	Rear Wheel Spacer,R	后轮右隔套	ϕ20*ϕ12.5*34mm		
F-17	308350002	9075172	4251814694237	Self Lock Nut	自锁螺母	M12*1.25		
F-21	303110001	9077304	4255816883651	Chain adjuster holder	千斤片			
F-22	303100001	9077305	4255816883668	Chain adjuster	千斤	(ϕ20*4*17)-M8*40mm 隔套/内六角螺丝		
F-2	308190006	9075285	4251814663677	Hex Socket Cap Bolt	内六角螺丝	M6*12		
F-18	308050006	9075234	4251814660089	Lock Nut	防松螺母	M8		
F-19	308010005	9075306	4251814663943	Spring Washer	弹垫	ϕ8		
F-20	308210010	9075361	4251814667040	Flat Washer	平垫	ϕ8*ϕ16*1.5		
F-23	308210004	9075244	4251814660188	Flat Washer	平垫	ϕ12*ϕ24*3		

Tiger VX配件清单（G 塑件） PLASTIC BODY KITS

G

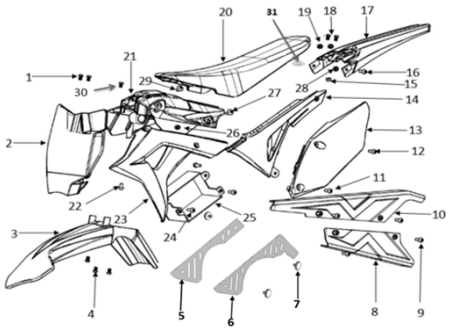

序号	零部件编号 SKU	Menila ET Art	EAN Code	英文名称 Spare part name in English	中文名称	规格Specification	order	Note
G-2	307150002	90730090808	4251814682111	Number Plate,White	号码牌	白色		

G-3	307510002	90733900101	4255675451718	Front Mudguard, Black	前挡泥板	黑色		
G-5	307740001	9073543	4255816883958	Battery Box Clamp, R	电池盒右压块（喷塑）	电池盒压块		
G-6	307740002	9073544	4255816883965	Battery Box Clamp, L	电池盒左压块（喷塑）	电池盒压块		
G-7	308370001	9073545	4255816883972	Quick-release Bolt, Alu.,black	黑色铝合金螺丝	M6*10		standard
G-8	307450012	9073546	4255816883989	Chain cover, lower	链罩下段《短》			
G-10	307450010	9073547	4255816883996	Chain cover, upper	链罩上段《长》			
G-23	307570014	90735370101	4255816883897	Front Plastic Cover, L, Black	前左侧板塑件	黑色		
	307530014	90735380101	4255816883903	Front Plastic Cover, R, Black	前右侧板塑件	黑色		
G-13	307260006	90735390101	4255816883910	Rear Side Plastic-2, L, Black	后左侧板塑件	黑色		
	307240006	90735400101	4255816883927	Rear Side Plastic-2, R, Black	后右侧板塑件	黑色		
G-14	307040004	90735410101	4255816883934	Rear Side Plastic-1, L, Black	三角板塑件左	黑色		
	307040003	90735420101	4255816883941	Rear Side Plastic-1, R, Black	三角板塑件右	黑色		
G-17	307220006	90733910101	4255675451725	Tail plastic,Black	后尾板塑件	黑色		
G-20	307680320	90797560101	4255816883859	Seat, Black	座垫	篮球纹皮 黑色		standard
G-21	307280006	9073534	4255816883866	Fake fuel tank	假油壶			
G-21	307290015	9073535	4255816883873	Fake fuel tank cap	假油壶盖板			
G-25	306320002	9073536	4255816883880	Wire collecting box	长方形线盒			
G-1	308170002	9075289	4251814663721	Hex Socket Cap Bollt,Flat Head	内六角大扁头螺丝	M6*12		
G-4	308170002	9075289	4251814663721	Hex Socket Cap Bollt,Flat Head	内六角大扁头螺丝	M6*12		
G-9	308200001	9075238	4251814660126	Hex Socket Cap Bollt,Flat Head	内六角小扁头螺丝	M6*8		
G-11	308160002	9075171	4251814694220	Hex Socket Cap Bollt,Button Head	内六角半圆头螺丝	M6*16		
G-12	308160002	9075171	4251814694220	Hex Socket Cap Bollt,Button Head	内六角半圆头螺丝	M6*16		
G-15	308050006	9075234	4251814660089	Lock Nut	防松螺母	M8		
G-16	308260002	9075398	4251814669129	Philip's Head Screw,Flat head	十字扁头螺丝	M5*12		
G-18	308160002	9075171	4251814694220	Hex Socket Cap Bollt,Button Head	内六角半圆头螺丝	M6*16		
G-19	308050005	9075228	4251814660027	Lock Nut	防松螺母	M6		
G-22	308270003	9075241	4251814660157	Cross self-tapping screw, Flat Head	十字扁头自攻	M4*12		
G-24	308190004	9075291	4251814663745	Hex Socket Cap Bolt	内六角螺丝	M5*16		
G-26	308040003	9075252	4251814660263	Antiskid Nut	防滑螺母	M6		
G-27	308160002	9075171	4251814694220	Hex Socket Cap Bollt,Button Head	内六角半圆头螺丝	M6*16		
G-28	308040002	9075246	4251814660201	Antiskid Nut	防滑螺母	M5		
G-29	308170003	9075249	4251814660232	Hex Socket Cap Bollt,Flat Head	内六角大扁头螺丝	M6*16		
G-30	308170003	9075249	4251814660232	Hex Socket Cap Bollt,Flat Head	内六角大扁头螺丝	M6*16		
G-31	308210010	9075361	4251814667040	Flat Washer	平垫	ф8*ф16*1.5		

Tiger VX配件清单（H电器件）ELECTRONIC PARTS.

H

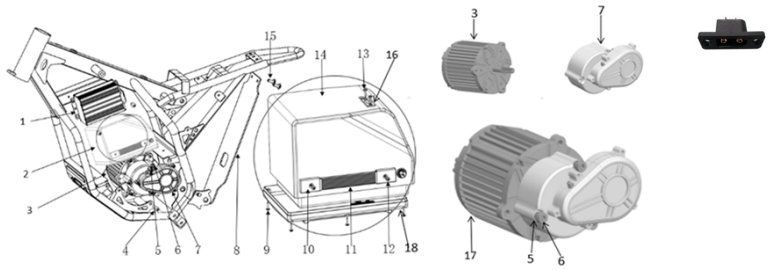

序号	零部件编号 SKU	Menila ET Art	EAN Code	英文名称 Spare part name in English	中文名称	规格Specification	order	Note
H-1	306340030	9070149	4255675451626	60V2000W Controller/ Output limit 45A	Tiger VX，60V无刷，控制器（黑色）	锐芯，60V/2000W，限流45A，2功能可调（防水连接器）		Hall cable and handlebar with waterproof plug, 1173184
H-1	306340040	9070148	4255675451619	48V1600W Controller/ Output limit 38A	Tiger VX，48V无刷，控制器（黑色）	锐芯，48V/1500+W(贴1600W)，限流38A，2功能可调（防水连接器）		1173182
H-1	306340043	9070147	4255675451602	36V1000W Controller/ Output limit 32A	Tiger VX，36V无刷，控制器（黑色）	锐芯，36V/1000W，限流32A，2功能可调（防水连接器）		1173180
H-2	306200021	9070281	4255675451695	60V15.6AH lithium battery complete with battery box	（攸攸）锂电池	锂电池60V/15.6AH，Tiger VX款		1173184+85
H-2	306200023	9070280	4255675451688	48V13AH lithium battery complete with battery box	（攸攸）锂电池	锂电池48V/13AH，Tiger VX款		1173182
H-2	306200022	9070279	4255675451671	36V13AH lithium battery complete with battery box	（攸攸）锂电池	锂电池36V/13AH，Tiger VX款		1173180
H-3	301020020	9079136	4255675451589	60V2000W Brushless Motor(without gear box),silver color	无刷电机（加长轴）银色标配	Tiger VX，60V/2000W，无刷（防水连接器/霍尔）		1173184+85
H-3	301020038	9079137	4255675451596	48V1600W Brushless Motor(without gear box),silver color	无刷电机（加长轴）银色标配	Tiger VX，48V/1500+W(贴1600W)，无刷（防水连接器/霍尔）,不含减速箱，银色		1173182+83
H-3	301020037	9079135	4255675451572	36V1000W Brushless Motor(without gear box),silver color	无刷电机（加长轴）银色标配	Tiger VX，36V/1000W，无刷（防水连接器/霍尔）,不含减速箱，银色		1173180
H-7	303160002	9077314	4255816883835	Gear Box T8F-19T, Black	变速箱,黑色	Tiger VX电动款，T8F-19齿		
H-17	301020039	9079136	4255675451589	60V2000W Brushless Motor complete with gear box, silver motor + black gear box	无刷电机（加长轴）银色电机配黑色变速箱	Tiger VX，60V/2000W+，加工装变速箱T8F-19齿，无刷（防水连接器/霍尔）		1173184+85
H-17	301020033	9079137	4255675451596	48V1600W Brushless Motor complete with gear box, silver motor + black gear box	无刷电机（加长轴）银色电机配黑色变速箱	Tiger VX，48V/1500W+(贴1600W)，加工装变速箱T8F-19齿，无刷（防水连接器/霍尔）		1173182+83
H-17	301020032	9079135	4255675451572	36V1000W Brushless Motor complete with gear box, silver motor + black gear box	无刷电机（加长轴）银色电机配黑色变速箱	Tiger VX，36V/1000W，加工装变速箱T8F-19齿，无刷（防水连接器/霍尔）		1173180
H-8	307190001	90730270101	4251814656556	Rear Mud-guard	后挡泥胶皮	橡胶材质		
H-10 H-11	307350002	9077312	4255816883811	Battery box handle	电池盒提手（含固定扣）黑色橡胶可伸缩	23mm*180mm		
H-16	306030014	9077313	4255816883828	Power Supply Socket XT90E	锂电池盒电源连接插座 XT90E-公头	XT90E-公头		
H-14	307310007	9073548	4255816884009	Battery box upper cover	电池盒（上盖）	塑料电池盒，上盖		

H-18	307310006	9073549	4255816884016	Battery box bottom cover	Tiger VX电池盒（下盖）	塑料电池盒，下盖		
H-4	308020027	9075365	4251814667088	Flange Bolt	法兰螺丝	M6*16		螺丝加耐高温厌氧胶
H-5	308010004	9075253	4251814660270	Spring Washer	弹垫	ϕ6		
H-6	308190026	9077310	4255816883798	Hex Socket Cap Bolt	内六角螺丝	M6*50		
H-9	308300001	9075345	4251814664957	Cross self-tapping screw, Button Head	十字半圆自攻	M4*16		
H-12	308290002	9077311	4255816883804	Cross self-tapping screw,Countersunk Head	十字沉头自攻，去尖	M4*12		电池厂家装配
H-13	308290001	9075295	4251814663813	Cross self-tapping screw,Countersunk Head	十字沉头自攻	M4*10		
H-15	308170002	9075289	4251814663721	Hex Socket Cap Bollt,Flat Head	内六角大扁头螺丝	M6*12		

Tiger VX配件清单（I电缆线）WIRINGS

	1	2	3
	4	5	

序号	零部件编号 SKU	Menila ET Art	EAN Code	英文名称 Spare part name in English	中文名称	规格Specification	order	Note
I-1	306090038	9070814	4255675452746	60V charger for lithium battery,EU Plug	60V锂电充电器	60V/2A锂电充电器，欧标（富源电）		1173084+85
I-1	306090033	9070813	4255675452739	48V charger for lithium battery,EU Plug	48V锂电充电器	54.6V2A 锂电充电器，欧标，谐同		1173082+83
I-1	306090043	9070812	4255675451664	36V charger for lithium battery,EU Plug	36V锂电充电器	42V2A 锂电充电器，欧标，谐同		1173080
I-2	306320001	9076016	4251814683712	Wiring junction box	接线盒	3线接线盒		
I-3	306580006	9077308	4255816883699	Waterproof wiring adaptor	防水连接器	1T3（一拖三主线）		
I-4	306250006	9077309	4255816883781	2- Adjustble Function wiring assy. ED10-2	电位器总成	ED10-2，2功能状态，L=200mm		
I-5	306060003	9078021	4251814658086	Charging Port, EDQA15	电动小越野，电动小四轮充电口	EDQA15，电池盒上，2.8插片，L=80±5mm		

Tiger VX配件清单（J 其他）OTHERS

J	1	2	3
	4		4

序号	零部件编号 SKU	Menila ET Art	EAN Code	英文名称 Spare part name in English	中文名称	规格Specification	order	Note
J-1	307600019	90739500303	4255675464237	Sticker set red	贴花	Tiger VX款		1173180
J-1	307600019	90739500202	4255675451633	Sticker set blue	贴花	Tiger VX款		1173180
J-1	307600019	90739500404	4255675451640	Sticker set green	贴花	Tiger VX款		1173180
J-1	307600019	90739500505	4255675451657	Sticker set orange	贴花	Tiger VX款		1173180
J-1	307600019	90739560303	4255675480145	Sticker set red	贴花	Tiger VX款		1173182+83
J-1	307600019	90739560202	4255675480152	Sticker set blue	贴花	Tiger VX款		1173182+83
J-1	307600019	90739560404	4255675480169	Sticker set green	贴花	Tiger VX款		1173182+83
J-1	307600019	90739560505	4255675480176	Sticker set orange	贴花	Tiger VX款		1173182+83
J-1	307600019	90739570303	4255675480183	Sticker set red	贴花	Tiger VX款		1173184+85
J-1	307600019	90739570202	4255675480190	Sticker set blue	贴花	Tiger VX款		1173184+85
J-1	307600019	90739570404	4255675480206	Sticker set green	贴花	Tiger VX款		1173184+85
J-1	307600019	90739570505	4255675480213	Sticker set orange	贴花	Tiger VX款		1173184+85
J-2	305390009	9071009	4251814682548	Brake Pad (2pcs/set) for mechanical brake	刹车铜基蹄块套装 (2只1套)	刹车蹄块，铜基		
J-2	305390008	9071006	4251814682296	Hydraulic brake friction pads	液压刹车摩擦片	两片为1套，套装，凯洛斯		
J-3	303040024	9012601	4251684905891	T8F Chain Connector	T8F链条扣	T8F型链条扣		
J-4	308020057	9077307	4255816883682	Torx-fixing Screw of Fuel Tank Cap	特殊螺丝	固定油壶盖，M3*10		
J-4	301020029	9072040	4255816883774	Drive Sprocket T8F-19	变速箱齿轮	T8F-19齿		

NITRO MOTORS

www.nitromotors.de

Copyright © 2025 Nitromotors | All rights reserved. "Nitromotors" is a registered trademark of Menila Import.
Druckfehler und Irrtümer vorbehalten. Menila Import | Hafenbahnstr. 5 | 45881 Gelsenkirchen | E-Mail: parts@menilagroup.de